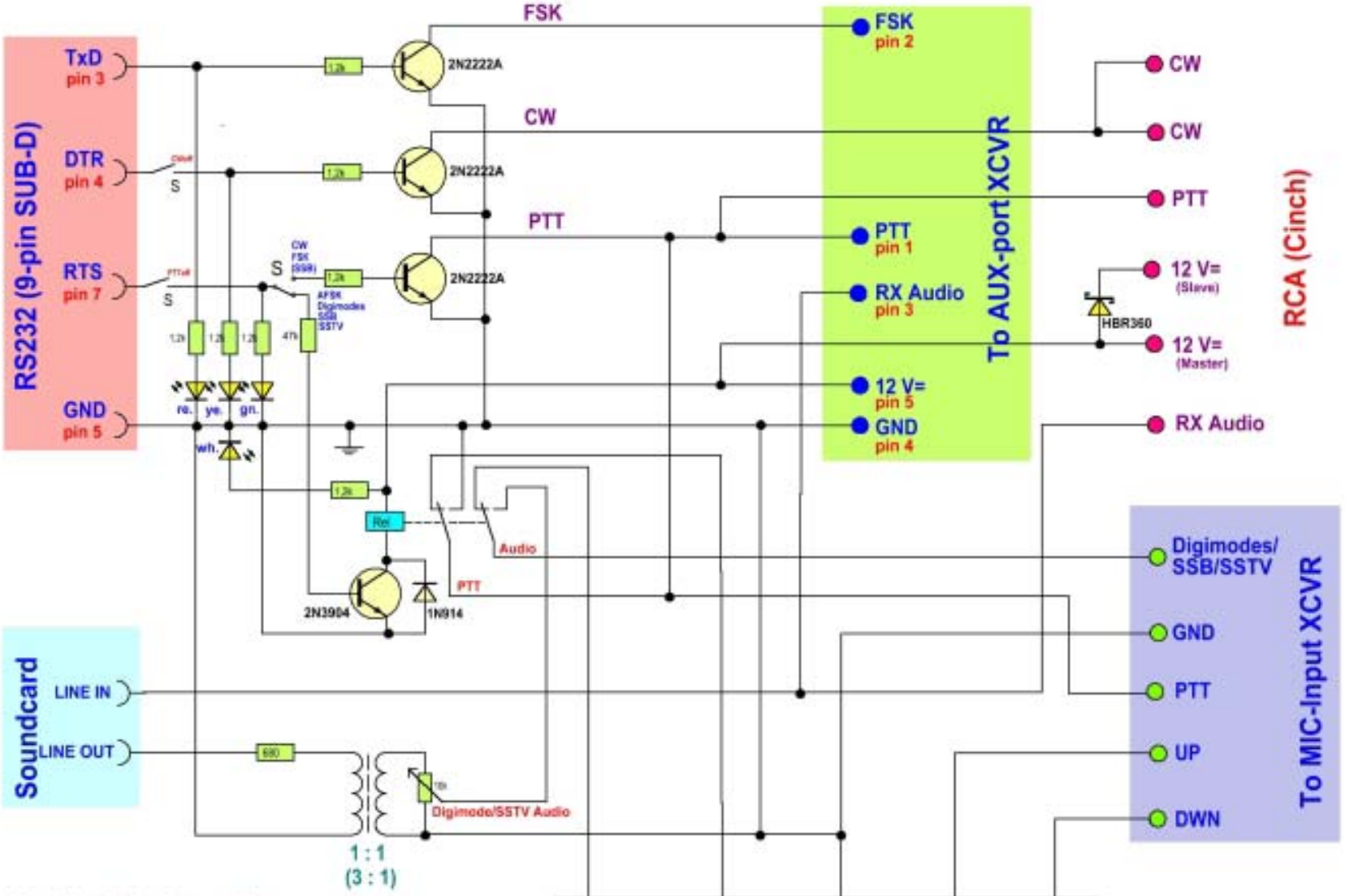

Hadi's Digimizer Plus

Universal Interface for the Digital Modes, SSB, and SSTV

© 2003 by DJ2PJ